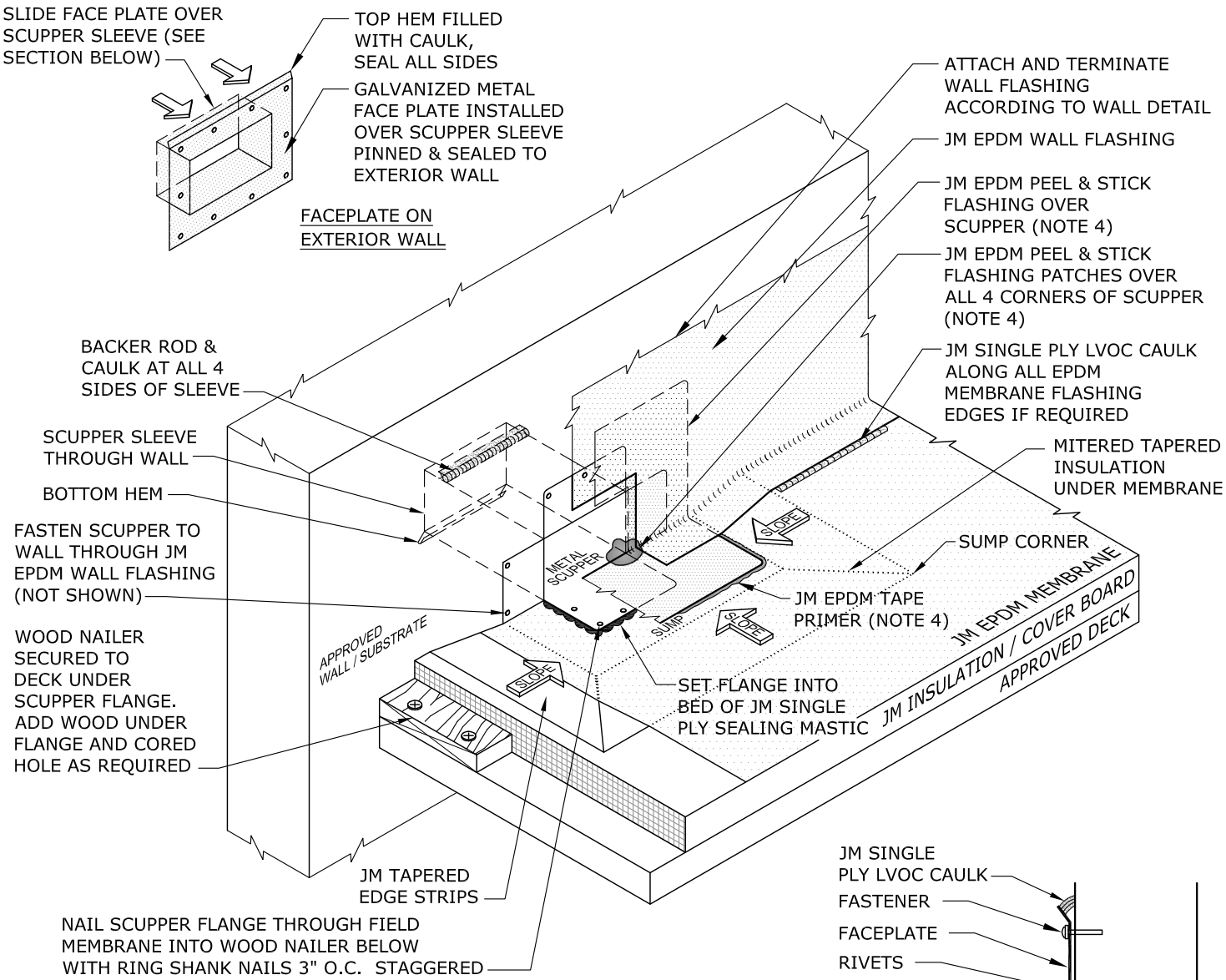

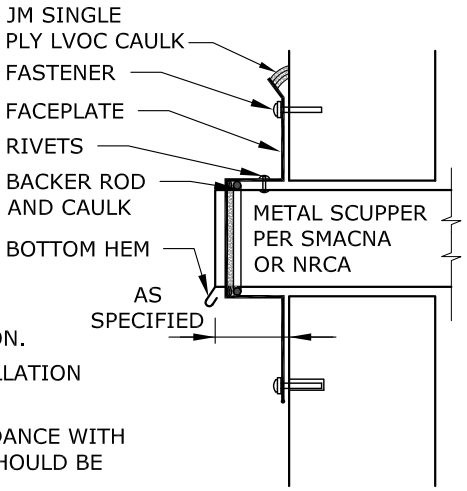

SCUPPER SECTION AT EXTERIOR WALL

NOTES:

1. REFER TO JOHNS MANVILLE WEBSITE (www.jm.com) FOR MOST UP-TO-DATE INFORMATION.
2. PLEASE SEE SINGLE PLY FLASHING SPECIFICATIONS FOR A FULL DESCRIPTION OF INSTALLATION INSTRUCTIONS AND REQUIREMENTS WHICH ARE CONSIDERED A PART OF THIS DETAIL.
3. ANY CARPENTRY OR METAL WORK SHOULD BE DESIGNED AND CONSTRUCTED IN ACCORDANCE WITH LOCAL CODE REQUIREMENTS AND/OR PROJECT SPECIFICATIONS. THESE COMPONENTS SHOULD BE REVIEWED AND APPROVED BY A LICENSED DESIGN PROFESSIONAL.
4. JM EPDM TAPE PRIMER MUST BE APPLIED ON ALL SURFACES COMING INTO CONTACT WITH JM EPDM PEEL & STICK FLASHING.
   - JM EPDM (BLACK) MEMBRANE REQUIRES:
     JM EPDM TAPE PRIMER OR JM SINGLE PLY MEMBRANE PRIMER (LOW VOC).
   - JM WHITE EPDM MEMBRANE REQUIRES:
     JM TPO MEMBRANE PRIMER OR JM SINGLE PLY MEMBRANE PRIMER (LOW VOC).
5. ALL SEALANTS / CAULKING SHALL BE PERIODICALLY INSPECTED AND MAINTAINED BY THE BUILDING OWNER THROUGHOUT THE LIFE OF THE ROOF.

DRAWING NO.	PRIMARY SCUPPER WITH TAPERED INSULATION SUMP	
E-DV-05 DRAINS & VENTS	MEMBRANE TYPE: JM EPDM /JM WHITE EPDM	Johns Manville is a manufacturer of commercial roofing products and offers this general conceptual information to you as a courtesy for general educational purposes only. This complimentary assistance is not to be either used or relied upon by anyone as a substitute for professional engineering design and documentation required by any building code, contract, or applicable law. By accepting the general conceptual information, you agree it does not constitute any representations, endorsements of, or an assumption by Johns Manville of any duty or liability for either the adequacy of the design of a building, any of its components or the sufficiency of any construction.
SCALE N.T.S / ISSUE DATE 02-15-24	MAXIMUM GUARANTEE TERM: 20 YEAR	

Johns Manville