Expand-O-Flash®
Sectional Reference

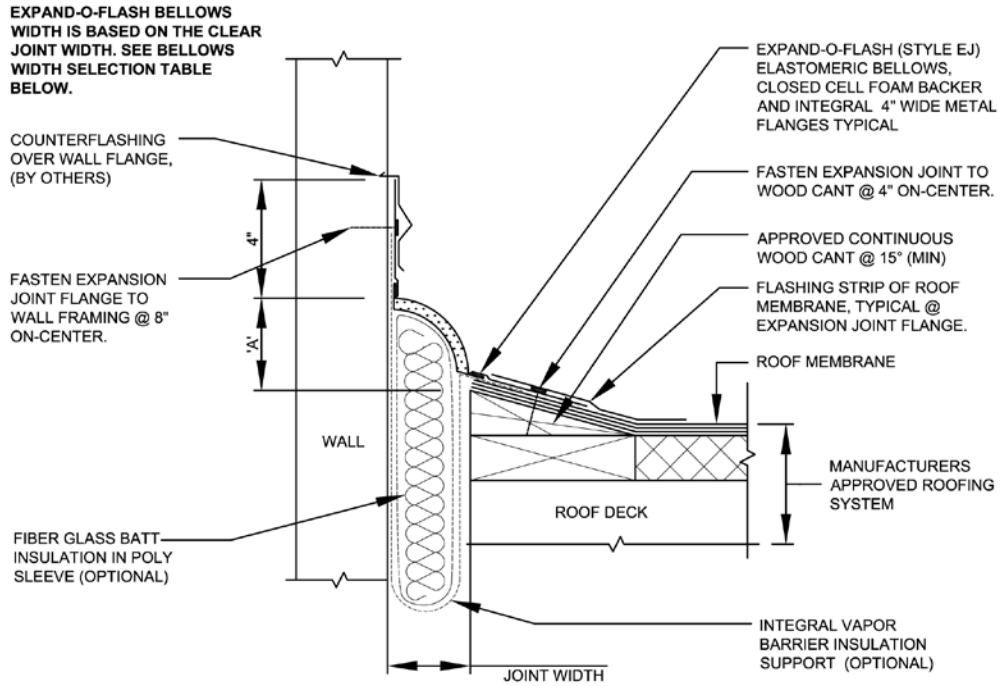

BELLOWS MOUNTING HEIGHT 'A'	
BELLOWS SIZE (IN)	MOUNTING HEIGHT 'A' (IN)
4"	2½"
6"	3¾"
8"	5⅛"
10"	6⅜"
12"	7½"

BELLOWS WIDTH SELECTION TABLE	
JOINT WIDTH RANGES	BELLOWS SIZE (IN)
1" - 2"	4"
2⅛" - 3"	6"
3⅛" - 4"	8"
4⅛" - 5"	10"
5⅛" - 6"	12"

CHART NOTES:

- BELLOWS WIDTH SELECTION TABLE IS BASED ON 50% JOINT MOVEMENT. CONTACT EXPAND-O-FLASH TECHNICAL SERVICE AT 800-445-1500 FOR BELLOWS SELECTION REQUIRING GREATER THAN 50% JOINT MOVEMENT.
- BELLOWS SIZES LISTED ARE JOHNS MANVILLE STANDARD SIZES.
- LARGER BELLOWS SIZES ARE AVAILABLE AS A CUSTOM ORDER.

NOTES:

- FOR ADDITIONAL APPLICATION INFORMATION OR TECHNICAL SERVICE PLEASE CONTACT OUR EXPAND-O-FLASH TECHNICAL SERVICE AT 800-445-1500
- THIS JOHNS MANVILLE PRODUCT CAN BE INCLUDED IN THE JM PEAK ADVANTAGE GUARANTEE. PLEASE CONTACT A JM TECHNICAL SERVICES SPECIALIST AT 800-922-5922 FOR SPECIFIC ROOFING AND FLASHING REQUIREMENTS.
- THIS DRAWING IS FOR REPRESENTATION PURPOSES ONLY. CONSULT EXPAND-O-FLASH TECHNICAL SERVICE FOR DEVIATIONS FROM THE ABOVE DETAIL
- FACTORY FABRICATED TRANSITIONS, MITERS AND INTERSECTIONS ARE AVAILABLE, PLEASE CONTACT EXPAND-O-FLASH TECHNICAL SERVICE FOR ADDITIONAL INFORMATION.
- CONTACT JM EXPAND-O-FLASH TECHNICAL SERVICE FOR INSTALLATION INSTRUCTIONS.

EXPAND-O-FLASH; ROOF TO WALL (STYLE EJ)

DRAWING NO.	SCALE	ISSUE DATE	REV. NO.
EJ-RW	NTS	5/8/12	---
	CAD FILE: STANDARD EOF CUT SHEETS.DWG		

Note: For the most current information on general guidelines, please refer to the System Considerations tab under Systems Introduction & Selection on the JM Roofing Web site. For specifications, flashing details and general installation information please refer to the System Application tab.

Refer to the Material Safety Data Sheet and product label prior to using this product.